CC-16WB DIMENSIONS

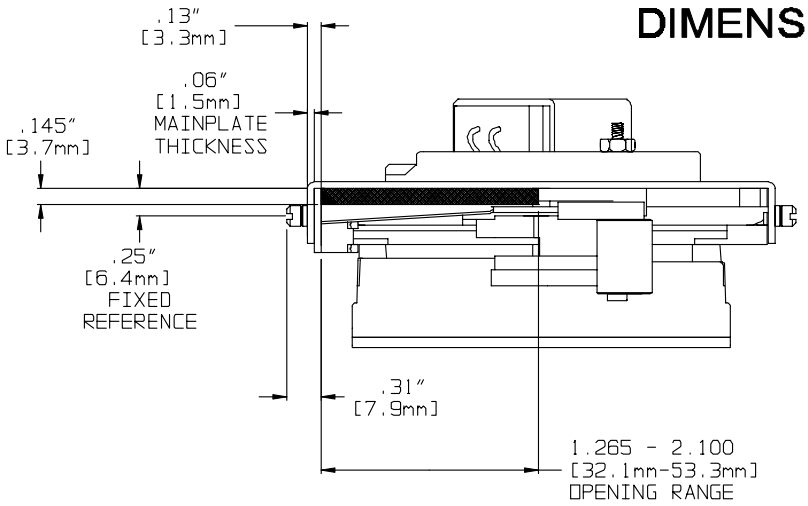

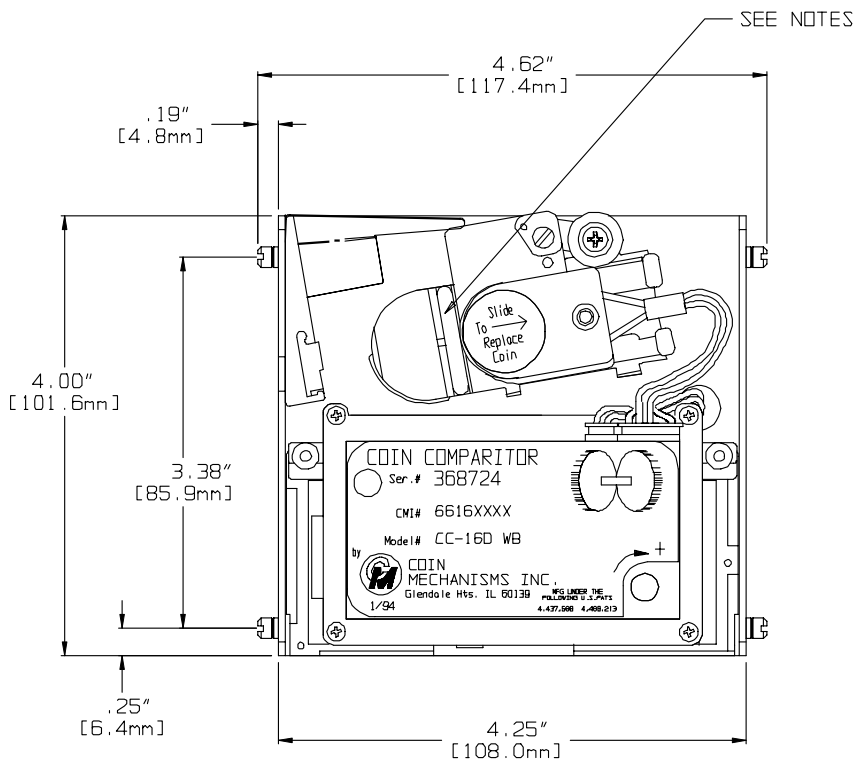

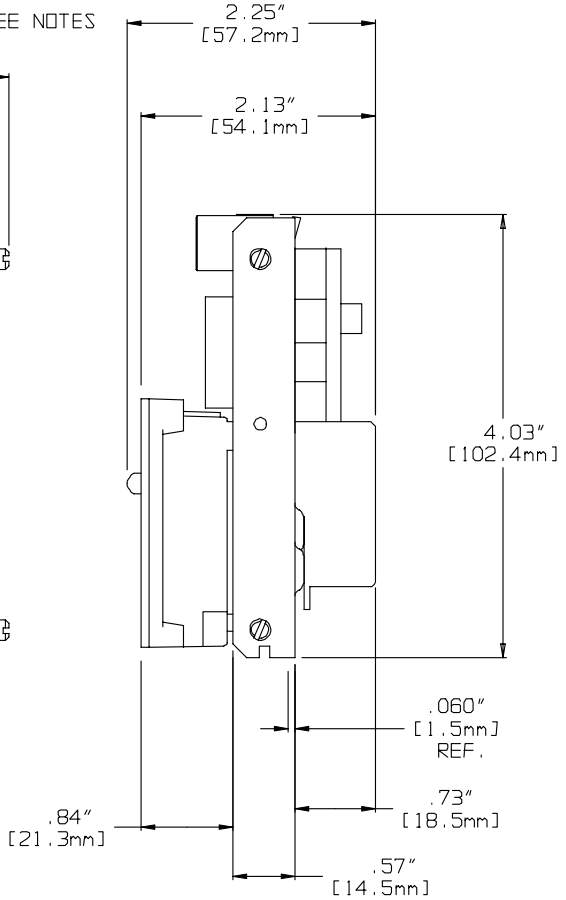

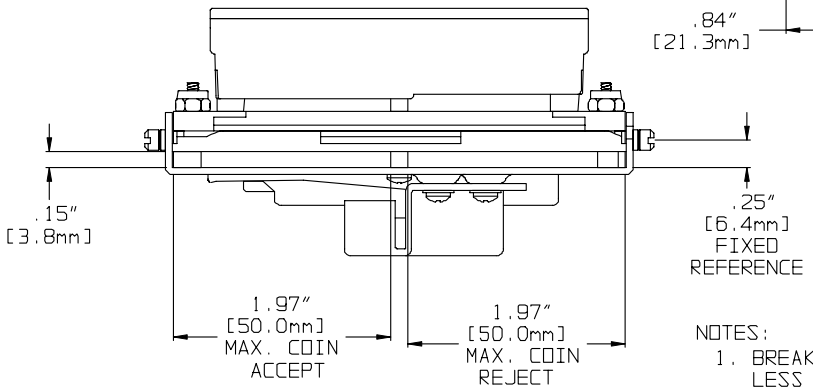

NOTES:

1. BREAK OFF SPACER TAB FOR COINS LESS THAN 1.875 DIA.
2. REMOVE SPACER FOR COINS BETWEEN 1.25 AND 1.60.

COIN MECHANISMS INC.

P.O. Box 5128, Glendale Heights, IL 60139-5128
630/924-7070*1-800/323-6498*FAX 630/924-7088*E-MAIL-coinmech@coinmech.com
VISIT OUR WEB SITE AT www.coinmech.com

P/N ENG00010 -4/99